Armak Geared Piston Gas Motor GGP04XB

Armak Motors define Gas Motors as driven by non corrosive gaseous media and temperatures below 150°C, with pressures up to 15 bar.

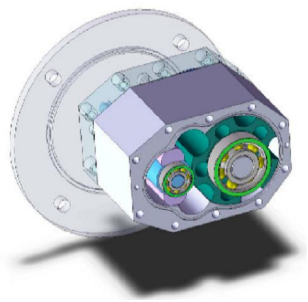

Technical details and product advantages:

- near **frictionless torque producing motor parts** resulting in **long and maintenance free lifetime**
- **completely enclosed motor casing**
- **compact design** and **freedom of installation**
- **metric flange + shaft**

The torque is developed by one rotating piston (in the picture the one the left), which transfers the torque directly to the output shaft. The sealing rotor is running without physical contact and with an extremely small gap for high motor efficiency.
This frictionless operation results in a long
maintenance free operation without downtime.

The applications for Armak Gas Pressure Motors are ORC-Systems. Heat sources from Solar Technology (collectors / mirrors) or Combined Heating and Power Systems (exhaust of the combustion engines) are fed into a heat exchanger. A suitable fluid is inserted and vaporised. Pressurised gas up to 15 bar can be produced and delivered to an Armak motor which in turn drives a generator to create electric power.
We can supply the key components, the fluid metering pump and gas pressure motor.
We expect to be able to supply a complete ORC system containing pump, heat exchanger, motor and generator by 3rd quarter of 2011.

Armak Gas Pressure Motors must be adjusted to the fluid (gas) used, as some media attack and destroy bearings and seals.

Other Products
Armak Air Motor AGP04, AGP10, AGP16

Technical Data

Motor		GGP04XB
max. power at 15 bar	kW	3,8
max. power at 6 bar	kW	1,8
max. operating pressure	bar	15
speed - max. power / 6 bar	rpm	3.000
torque - max. power / 6 bar	Nm	6
start torque at 6 bar	Nm	5,2
max. continuous speed	min^{-1}	3.300
recommended min. speed	min^{-1}	1.000
gas connection		G 1 1/2"
temperature range	° C	max.+150
radial force - middle of shaft	N	100
axial force on shaft	N	20

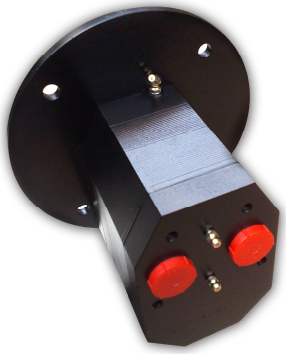

Gas Motor GGP04XE

We reserve the right to improvements without prior notice

Armak GmbH - Motoren
Enzstr.39 D-70806 Kornwestheim
Managing Director: W.Krisch, T.Markham

Fon +49 7154 82400
Fax +49 7154 824080
HRB 207012 Stuttgart

www.armak-motor.de
info@armak-motor.de
ID-Nr DE814130032

Armak Geared Piston Gas Motor GGP04XB

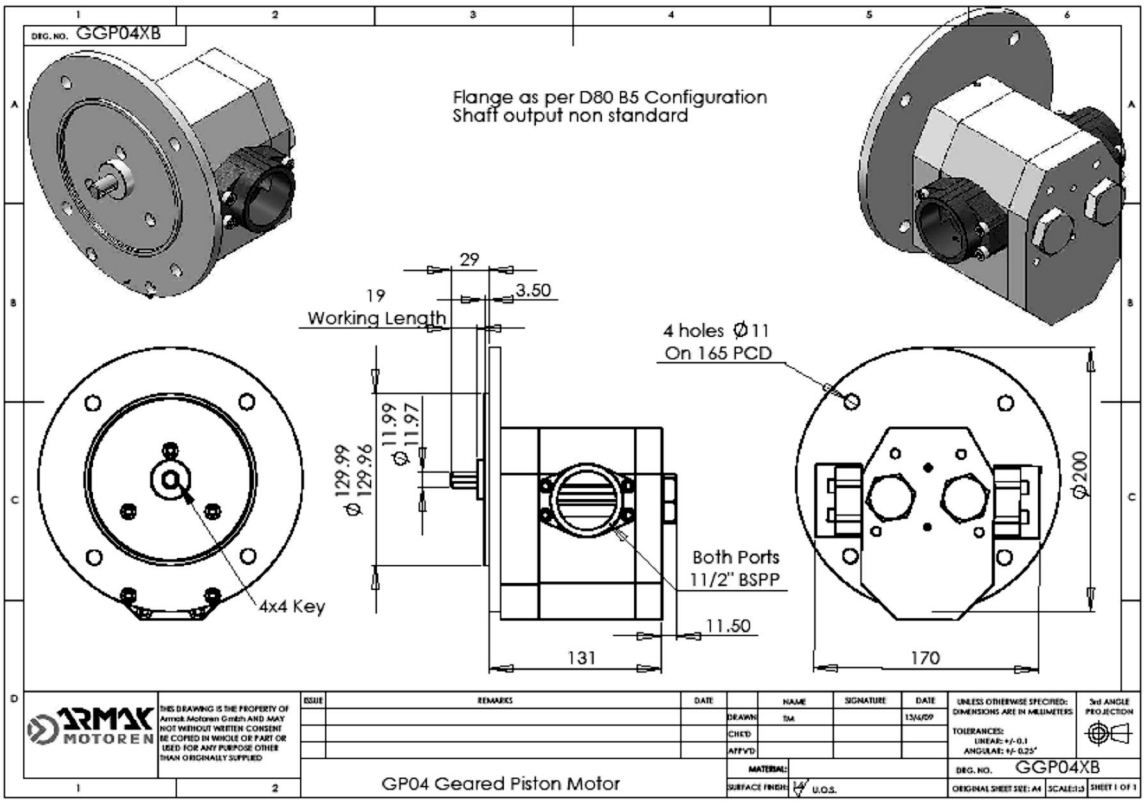

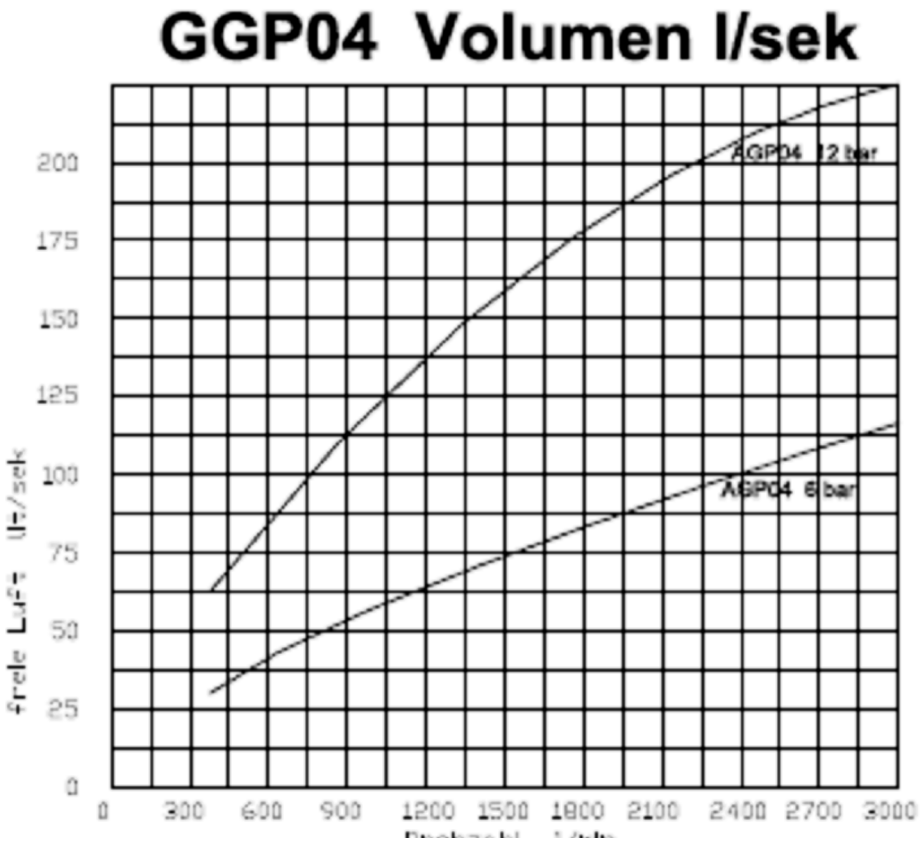

Armak GmbH - Motoren
Enzstr.39 D-70806 Kornwestheim
Managing Director: W.Krisch, T.Markham

Fon +49 7154 82400
Fax +49 7154 824080
HRB 207012 Stuttgart

www.armak-motor.de
info@armak-motor.de
ID-Nr DE814130032

Armak Geared Piston Gas Motor GGP04XB

Power (Leistung) at 6 and 12 bar versus speed rpm Torque /Drehmoment) at 6 and 12 bar versus speed

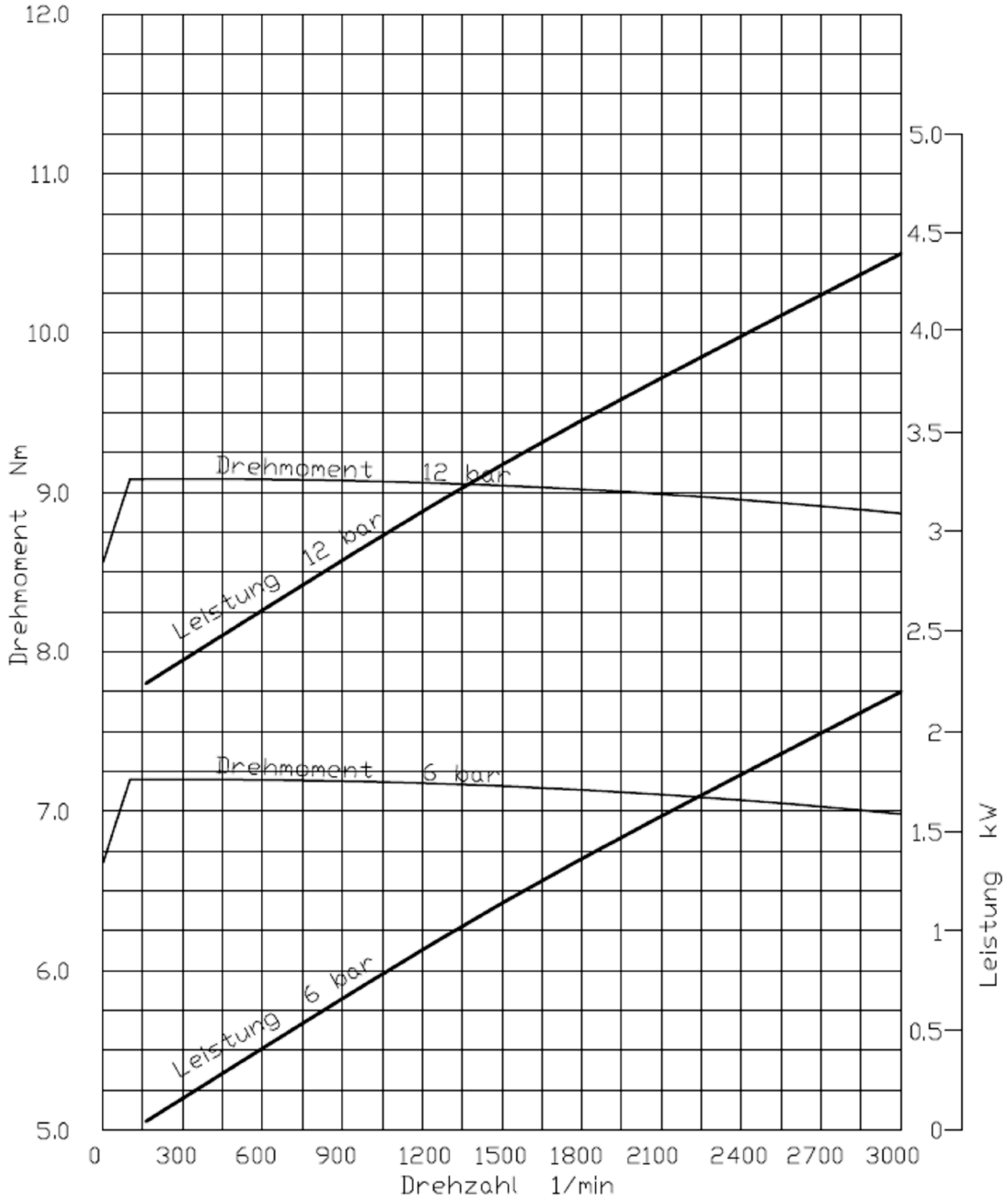

Armak GmbH - Motoren
Enzstr.39 D-70806 Kornwestheim
Managing Director: W.Krisch, T.Markham

Fon +49 7154 82400
Fax +49 7154 824080
HRB 207012 Stuttgart

www.armak-motor.de
info@armak-motor.de
ID-Nr DE814130032